International Engineering Research Journal

CFD Analysis and Experimental Validation of Intake Swirl for Diesel Engine

Prayatna A Oddiwar†, C.D. Koshti‡

†Department of Mechanical engineering, MIT, Rambaugh colony, Kothrud, Pune, India
‡Department of Mechanical engineering, MIT, Rambaugh colony, Kothrud, Pune, India

Abstract

Swirl is the one of the principle air motion inside the engine cylinder. Swirl plays a very important role in combustion process so it is required to maintain correct amount of Swirl value within cylinder to achieve required engine emission norms. Swirl is represented by a dimensionless number called ND Swirl. As valve lift changes the ND swirl value also changes. In this present work CFD Analysis is carried out to predict the amount of Swirl induced in Diesel engine during the air induction process. ND Swirl is calculated at valve lift of 6mm, 8mm, 9.476mm, 12mm and 16mm. After analysis it is observed that as Valve liftincreases Mass flow rate and ND Swirl value increases. ND Swirl value obtained from CFD analysis is validated with Experimental results and concluded that there is less than 5% of error in between CFD and Experimental results

Keywords:*CFD, ND Swirl, Valve lift, Mass flow rate*

1. Introduction

Swirl is a rotational motion of incoming air along a cylinder axis. Swirl is the one of the principle air motion that is used to provide rapid air-fuel mixture within a short interval of time. Emission formation is mainly dependent on how air-fuel mixing takes place (Praveen Jain, 2016) so we can control the engine emissions by controlling the swirl. Swirl number is a dimensionless parameter to quantify the rotational motion within the cylinder. It is a ratio of tangential component of velocity to the total velocity or of angular speed of rotating fluid to the engine speed (Heywood, 2013).

To achieve upcoming emission norms, some changes has to be made in combustion system and Swirl is the very important parameter which affect the combustion process (K .K. Rao, 1993), so to achieve desired emission norms, correct swirl ratio has to be maintained within the cylinder. Due to Swirling motion of air Sauter mean diameter of fuel droplet decreases and very small fuel droplets forms and due to this heat transfer area between fuel droplet and air increases and fuel droplet get vaporized quickly and it will minimize the combustion delay and improves combustion efficiency.

Swirl is dependent on different geometric Parameters (Yashodhan Kulkarni, 2005). We can control the swirl in cylinder by changing shape of intake port and piston bowl shape also by providing fins, grooves to increase the turbulence. Amount of Swirl has to be maintained is depends on different things that is injection pressure, fueling quantity etc. At high fueling the fuel particles direct comes in contact with cylinder wall and due to presence of cooling jacket surrounding to the cylinder wall fuel particle near the wall region cannot burn completely and produces unburned fuel particles, to minimize this problem in case of high fueling high swirl should be maintained .Low Swirl is preferable for high injection pressure system and High swirl is preferable for low injection pressure systems.

In work done by Praveen Jain and VinayakKulkarni(2016), it is found that Design of experiment is a very useful statistical analysis tool. DOE is used to decide geometric parameters which gives the desired swirl value and accordingly the changes should be made in geometry, among all geometrical parameters chamfer angle was most important geometrical parameter which affect the swirl. In this paper author has also Explain the Procedure for CFD Analysis for intake port to find Mean Swirl number.In work done by Suzanne Caulfield, Brandon Rubenstein and Jay K. Martin(1999), It is found that Computational Fluid Dynamics is a powerful technique to solve fluid flowing problems. While doing CFD analysis type of meshing using plays an important role so to decide which type of mesh gives better results for predicting swirl, Mesh sensitivity study has performed in their work they also study the effect of different turbulent model on final result.

In work done by K .K. Rao, D. E. Winterbone and E. Clough(1993), It is found that by maintaining Effective swirl inside cylinder we can improve combustion process and minimise the particulate matters but it will increase the NOx formation due to excess temperature achieved.In work done by HongmingXu(2001), It is found that there are different Experimental method to calculate Swirl ratio among them using Swirl torque meter is a best method and it gives more realistic

results compared with paddle wheel method. The calculation method that should be followed to calculate the Swirl ratio is explained by Michele Battistoni, Angelo Cancellieri and Francesco Mariani(2008) in their research work.

Present work is carried out to achieve upcoming emission norms. Initially engine was designed for Tier 2 engine norms but now as Tier 4 is coming to market, to achieve that norms it is decided to made changes in combustion process and Swirl is one of the important that affect the combustion process so Swirl value is targeted. In the Present work Intake port Analysis is carried out by using CFD Technique to find out Swirl Number. Swirl number is calculated at different valve lift and finally validated with Experimental results.

2. CFD Analysis

Computational fluid dynamics is a branch of fluid mechanics that uses a numerical Analysis method to solve fluid flowing problems.
Steps involved in CFD Analysis is as given below

- Geometry Preparation and fluid volume extraction
- Meshing
- Fluent case set up
  - Selecting Equation of fluid motion
  - Pressure-velocity coupling method
  - Discretisation method
  - Boundary conditions
- Simulation
- Post processing

2.1 Geometry Preparation and fluid volume extraction

Geometry preparation and fluid volume extraction process carried out in ANSYS Design modular. Geometry is given in figure 1 it consist of Runner, port, fire deck, valve, cylinder etc.

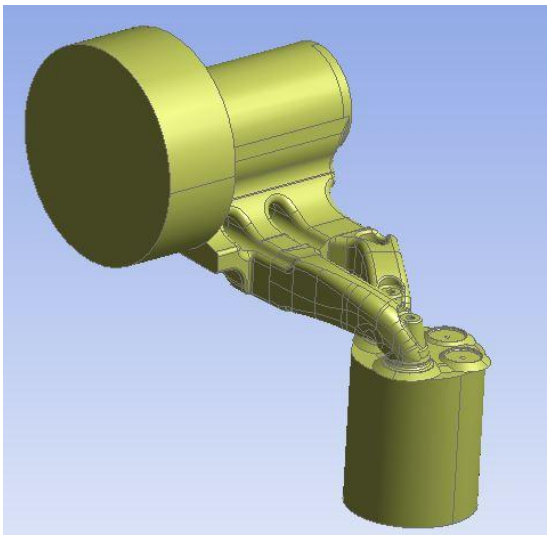

Fig.1 Geometry

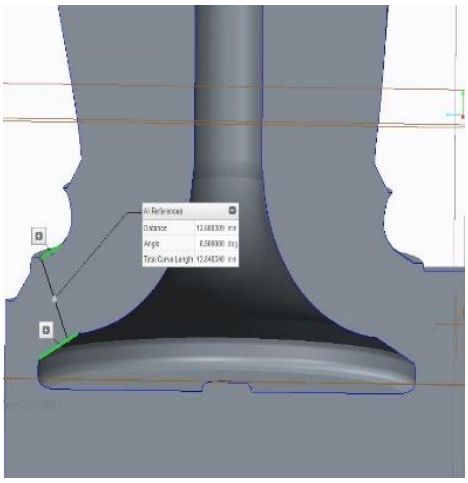

Fig.2 Valve lift measurement

The analysis is performed at different valve lift of 6mm, 8mm, 9.476mm, 12mm and 16mm. Five different geometry has prepared with different valve lift.

2.2 Meshing

Meshing is performed in ANSYS Mesh. Grid generation is very important process. The result of solution is depends on quality of grid we used for analysis purpose(Suzanne Caulfield, 1999). Fine mesh gives good results.as we increases the number of element count it will give better results but again increases the computational time.so to select the correct mesh size which can give good better results with minimum time a Mesh sensitivity check has performed. Tetrahedral mesh is used and to capture boundary layer phenomenon the inflation layers are created on wall side.

To perform this check 4 different mesh has created keeping all setting same only by changing the element size and swirl analysis is carried out.Table 1 shows the Mesh sensitivity results

Table 1 Mesh sensitivity check

	Mesh 1	Mesh 2	Mesh 3	mesh 4
Element count	8	4.7	4.59	1.9
Min Quality	0.0609	0.0582	0.0522	0.06
Mass flow rate	0.2563	0.26033	0.2637	0.2558
torque	0.1865	0.19284	0.19817	0.20159
ND swirl	0.346	0.352	0.358	0.374

From table 1 it is observed that as we changes Element count the final results will change.

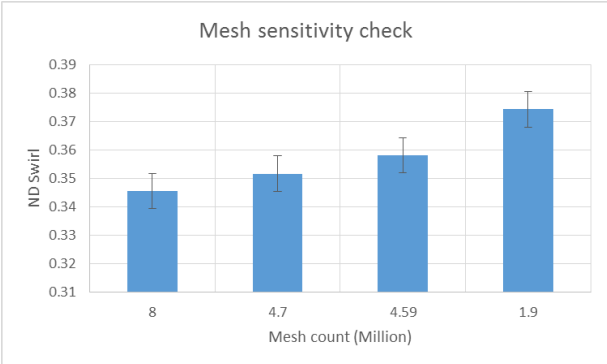

Fig.3 Error bar plot for mesh sensitivity check

Figure 3 shows the Error bar plot having 5% of Error amount. From graph it is observed that Mesh 1, mesh 2 and mesh 3 are lies within the Error range. But mesh 4 is not lies in the Excepted error range. So for Analysis purpose we can use Mesh 1, Mesh 2 or Mesh 3.In this analysis swirl is calculated for 5 different valve lift just to minimize the simulation time the Mesh 3 is selected to perform the analysis.

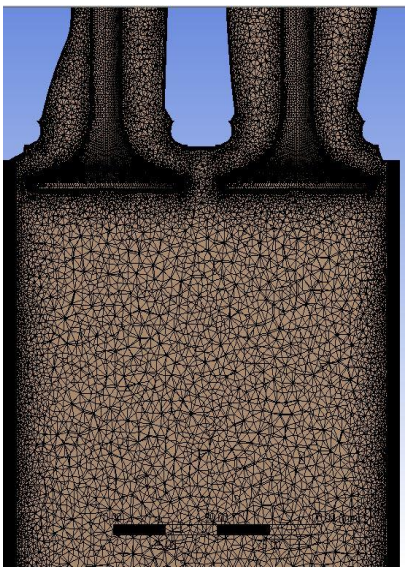

Fig.4 Inside meshing view for cylinder portion

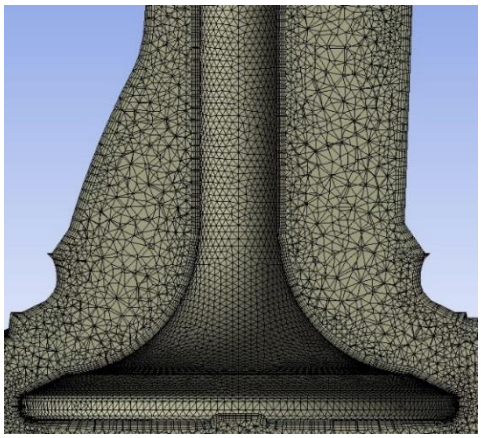

Fig.5 Meshing near valve area

Figure 4 and Figure 5 shows the detailed idea of mesh created.

2.3 Physics modelling

CFD Analysis is carried out in Fluent 16.2.In fluid flow modelling Mass, momentum and energy equation is used and to model turbulence K-∈ turbulence model is used (Praveen Jain, 2016). To solve the governing equations the Pressure inlet and Pressure outlet boundary conditions are provided and all other surfaces are considered as an adiabatic wall.

Boundary conditions used:
Inlet:
Pressure =0 pa (atmospheric pressure)
Temperature = 300 K
Outlet:
Pressure= -5000 pa static pressure
Temperature = 300 K

As higher order discretization scheme gives more accurate results (Suzanne Caulfield, 1999), 2nd order discretization scheme is used for discretization of momentum, turbulence kinetic energy and turbulence dissipation rate equations. Mass flow rate and torque is monitored to find ND Swirl value (Praveen Jain, 2016). To Monitor Torque a user defined function is created as given in equation 1

$$T = \int \rho * r * V_\theta * V_z \; dA \qquad [1]$$

By using above equation the torque is calculated. As Swirl is the ratio of angular speed of inside rotating fluid to Engine speed , to calculate Swirl ration Angular velocity is required and it is given by Equation 2(Michele Battistoni, 2008)

$$\omega = \frac{2 * T}{m * R^2} \qquad [2]$$

Ideal velocity is calculated by using Equation 3

$$V = \sqrt{\frac{2 * \Delta P}{\rho}} \qquad [3]$$

By using the angular velocity and ideal velocity Non Dimensional Swirl is calculated by using Equation 4(Michele Battistoni, 2008)

$$\omega_{ND} = \frac{2 * R * \omega}{V} \qquad [4]$$

Same procedure is followed for all valve lifts.

3. Result and discussion

Table 2 shows the value of mass flow rate, torque and ND swirl corresponding to each valve lift

Table 2CFD Analysis results

Valve lift (mm)	6	8	9.45	12	16
Mass flow rate (kg/s)	0.178	0.219	0.242	0.263	0.273
Torque (N-m)	0.068	0.090	0.109	0.163	0.249
ND Swirl	0.20	0.22	0.24	0.33	0.49

Figure 6 shows the graph between Valve lift and mass flow rate. From graph it is observed that as valve lift increases due to increase in Effective flow area Mass flow rate also increases

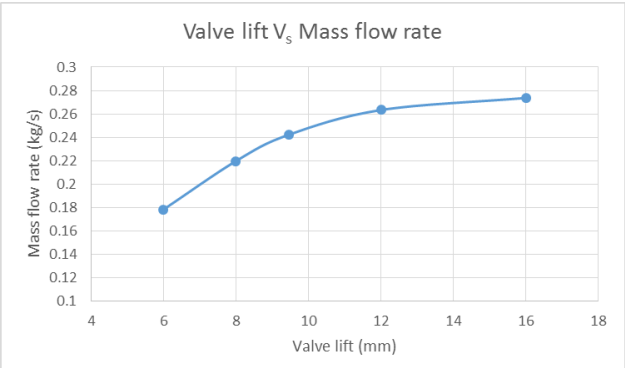

Fig.6 Graph between valve lift and mass flow rate

Figure 7 shows the graph between Valve lift and ND swirl number. From graph it is observed that as Valve lift increases ND Swirl value also increases

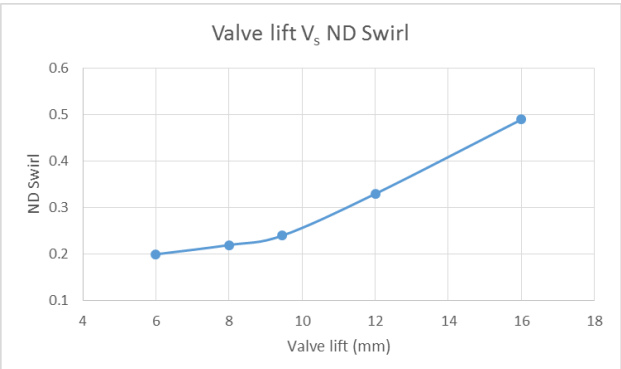

Fig.7 Graph between Valve lift and ND Swirl

After achieving convergence to analyze how fluid is flowing and to observe fluid flow pattern the post processing is carried out.

Figure 8 shows the streamline path plot for 8mm valve lift and figure 9 shows the streamline path plot for 16 mm valve lift. For 8mm lift case Due to less Effective flow area high velocity region is observed in valve opening region and it is highlighted by red circle in figure 8.

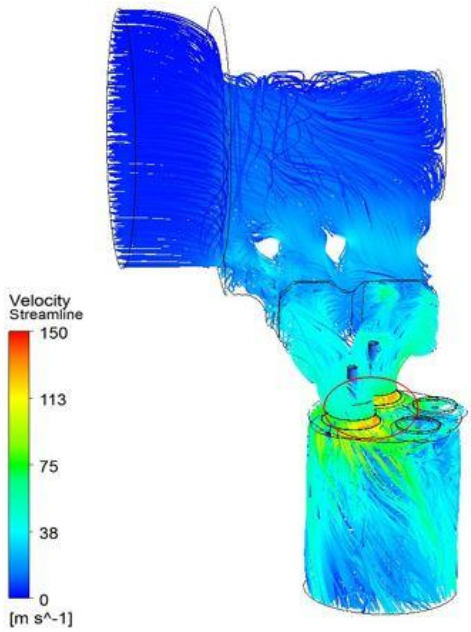

Fig.8 Streamline plot for 8mm valve lift geometry (Circle with red color indicates the high velocity region)

Figure 10 shows the velocity vector plot for 8mm lift and figure 11 shows the velocity vector plot for 16 mm lift. The flow pattern difference is highlighted with arrow. This difference is because of different Effective flow area.

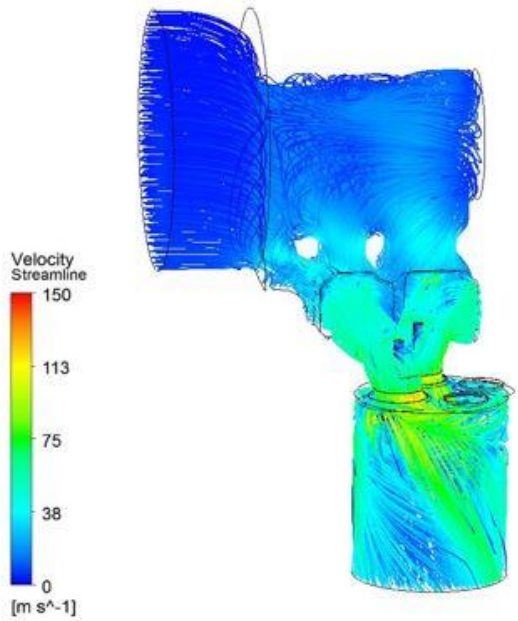

Fig.9 Streamline plot for 16 mm valve lift geometry

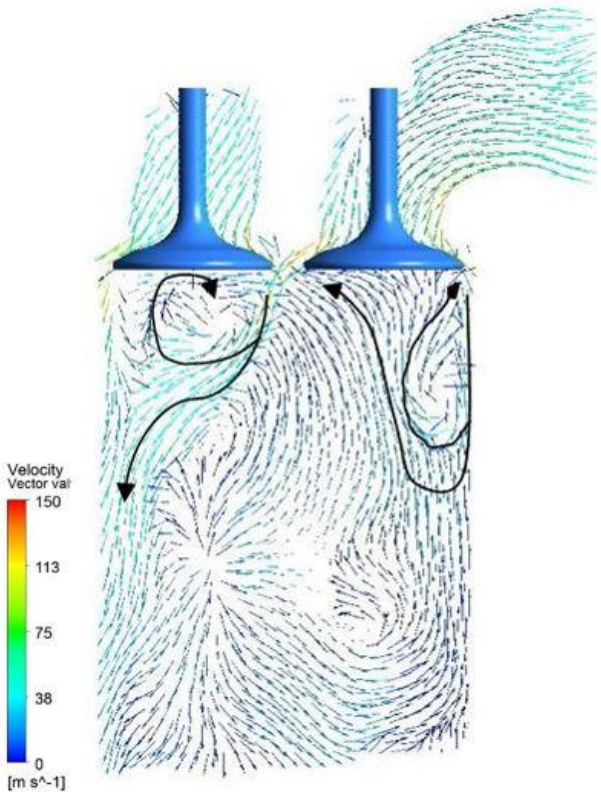

Fig.10 Velocity vector plot for 8 mm valve lift geometry

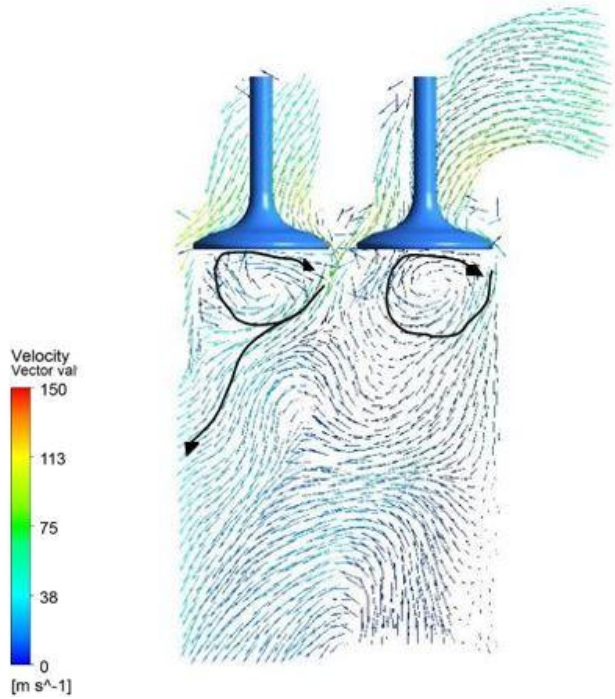

Fig.11 Velocity vector plot for 16 mm valve lift geometry

As valve lift changes the fluid flow pattern changes due the due to change in flow restriction. When valve lift increases the mass flow rate increases and its rotational moment increases it results in increase in ND Swirl value. CFD cannot predict ND swirl value for low valve lift. At low valve lift due to less effective flow area, when fluid enters inside the cylinder it comes in contact with fire deck that is near wall of fire deck and CFD cannot predict ND Swirl value in this region accurately. As valve lift increase the Effective area increases and flow moves away from fire deck and move downward direction and CFD can capture that flow accurately.

From CFD Analysis it is observed that as valve lift increases Mass flow rate and ND Swirl value increases and maximum ND Swirl value observed at maximum valve lift.

3. Experimental Validation

To calculate swirl value Experimentally Swirl test rig is used. This test is also carried out for different valve lifts. Table 3 contains Experimental and CFD results at five different results.

Table 3 Experimental results

ND swirl value		
valve lift(mm)	Experimental	CFD
6	0.073	0.2
8	0.123	0.22
9.45	0.254	0.24
12	0.338	0.33
16	0.486	0.49

Figure 12 shows the percentage error between CFD and Experimental results. Error amount is 5%. From Graph It is observed that in case of all valve lifts CFD and Experimental results are lies within the Error bar.

As Swirl test rig is purely mechanical measurement device there might be some mechanical losses associated with it.

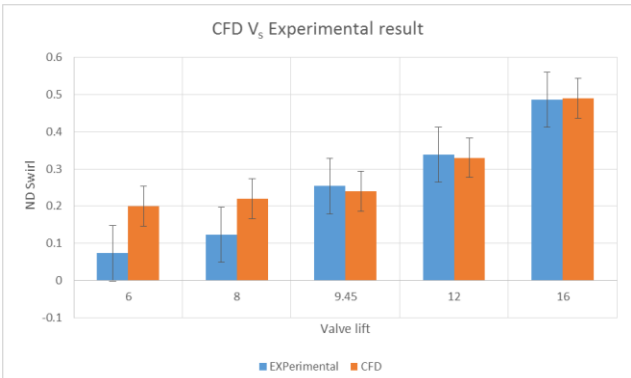

Fig.12 Error bar showing % error between CFD and Experimental results

Conclusions

1) In order to find the Swirl ratio the CFD analysis is carried out. From Figure 12 it is concluded that CFD can predict value of ND Swirl very well. there is only 5% of error in between CFD and Experimental results

2) CFD is a very effective simulation tool for modeling fluid flow. It is less expensive and less time consuming process compared to Experimental method
3) From Figure 12 it is also observed that At 6mm lift there is much difference in CFD predicted and Experimental results as compared to remaining valve lift and this is due to the reason that CFD is not able to predict fluid flow behavior at low valve lifts because at low valve lift due to less Effective flow area more amount of fluid comes in contact with firedeck and CFD is unable to model that flow accurately
4) Grid generation process is one of the key factor in CFD analysis. Final results obtained through the analysis process are depends on the mesh used for analysis.
5) Mass flow rate and NS Swirl ratio is increases with increasing the valve lift

References

Praveer Jain, Vinayak Kulkarni, Sachin Kulkarni, Ravindra Mahajan,(2016), Optimization of Engine Variables for Low Emissions of a 6 Cylinder Heavy Duty Diesel Engine, *SAEInternational,* 2016-28-0.21

Heywood, J.B, Internal Combustion Engine Fundamentals, McGraw *Hill*, 2013, ISBN: 978-1-25-900207-6

Yufeng Li, (2014), A New Estimation of Swirl Ratio from Steady Flow Rig Testing, *SAE International*, 2014-01-2587

Michele Battistoni, Angelo Cancellieri, (2008), Steady and Transient Fluid Dynamic Analysis of the Tumble and Swirl Evolution on a 4V Engine with Independent Intake Valves Actuation, *SAE International,* 2008-01-2392

Michael J. Bergin, Rolf D. Reitz, Seungmook Oh, Paul C. Miles, Leif Hildingsson, Anders Hultqvist,(2007), Fuel Injection and Mean Swirl Effects on Combustion and soot Formation in Heavy Duty Diesel Engines, *SAE International*, 2007-01-0912

YashodhanKulkarni.ManasiMone, Asit Desai, Saurabh Markandeya,(2005), Optimization of inlet port performance on emission compliance of Naturally Aspirated DI Diesel Engine, *SAE International*, 2005-26-010

Par Bergstrand, IngemarDenbratt,(2002), The Effects of Leaner Charge and Swirl on Diesel Combustion, *SAEInternational*, 2002-01-1633

Hongming Xu,(2001), Some Critical Technical Issues on the Steady Flow Testing of Cylinder Heads, *SAE International*, 2001-01-1308

Suzanne Caulfield, Brandon Rubenstein,(1999), Comparision between CFD Predictions and Measurements of inlet port discharge coefficient and flow Characteristics, *SAE International,* 1999-01-3339

K. K. Rao, D. E. Winterbone, E. Clough,(1993), Influence of Swirl High Pressure Injection in Hydra Diesel Engine, *SAE International*, 930978